Experiments of the LACOMECO Project at KIT

A. MIASSOEDOV [1], M. KUZNETSOV [1], M. STEINBRÜCK [1], S. KUDRIAKOV [2], Z. HÓZER [3], I. KLJENAK [4], R. MEIGNEN [5], J.M. SEILER [6], A. TEODORCZYK [7]

[1] KIT, Karlsruhe (DE) [2] CEA, Saclay (FR) [3] AEKI, Budapest (HU)
[4] JSI, Ljubljana (SI) [5] IRSN, Fontenay-aux-Roses (FR)
[6] CEA, Grenoble (FR) [7] WUT, Warsaw (PL)

ABSTRACT

The LACOMECO project provides European organizations access to experimental facilities at Karlsruhe Institute of Technology (KIT) designed to study the remaining severe accident safety issues, including the coolability of a degraded core, corium coolability in RPV, melt dispersion to the reactor cavity, and hydrogen mixing and combustion in the containment. The facilities are unique in its specified field and the experiments are designed to be complementary to other European experimental platforms to form a coherent European nuclear experimental network.

The LACOMECO platform includes: 1) QUENCH facility designed for the investigation of early and late phases core degradation in prototypical geometry for different reactor designs and cladding alloys; 2) LIVE facility, a large-scale 3D facility for the investigation of melt pool in the lower head of RPV; 3) DISCO facility, the only operating facility worldwide to investigate the melt dispersion to the reactor cavity and direct containment heating; 4) HYKA facility with a number of large and medium scale experimental vessels to investigate the hydrogen behaviour in containment under well controlled conditions.

Eight experiments are to be performed in the LACOMECO project addressing the high and medium priority issues defined by the SARP group of SARNET. The paper addresses the objectives of the project and describes the main results obtained in the experiments performed up to now.

1 INTRODUCTION

Severe accidents can cause significant damage to reactor fuel resulting in more or less complete core meltdown and threaten the containment integrity. Such accidents are highly unlikely in light of the preventive measures implemented by operators. However, they are the focus of considerable research, because the release of radioactive products into the environment would have serious consequences. This research also reflects a commitment to the defence-in-depth approach.

As stated in the final draft of the Strategic Research Agenda (SRA) [1] of the Sustainable Nuclear Energy Technology Platform (SNETP), needs for safety research are identified by both regulators and operators, from their respective perspective. As discussed in the SRA, safety research is still needed to support long-term operation of existing LWRs in Europe.

Though the SRA can not integrate all national programmes on safety research carried out in Europe, the platform members agree on the issues that are of highest priority. Regarding the issues in severe accidents, the SRA refers to the work carried out in the framework of the Severe Accident Research Network of Excellence (SARNET) [2], [3] to conclude to a common view on the ranking of the research priorities in the field. The research priorities on severe accident management [4] were prepared by the SARNET SARP group. The objective of this group was to review and reassess the priorities of research issues and to propose the results as basis to harmonise and to re-orient research

programmes, to define new ones, and to close – if possible – resolved issues on a common basis. After two years of intense discussions and three meetings of the SARP group, the R&D priorities on severe accident management are ranked in 4 groups:

1. Six issues are regarded to be investigated further with high priority (further research is considered as necessary):

- Core coolability during reflood and debris cooling;
- Ex-vessel melt pool configuration during Molten Corium Concrete Interaction (MCCI), ex-vessel corium coolability by top flooding;
- Melt relocation into water, ex-vessel Fuel Coolant Interaction (FCI);
- Hydrogen mixing and combustion in containment;
- Oxidising impact (Ruthenium oxidising conditions/air ingress for High Burn-up and Mixed Oxide fuel elements) on source term;
- Iodine chemistry in Reactor Coolant System (RCS) and in containment.

2. Four issues are re-assessed with medium priority (these items should be investigated further as already planned in the different research programs):

- Hydrogen generation during reflood and melt relocation in vessel;
- Corium coolability in lower head;
- Integrity of Reactor Pressure Vessel (RPV) due to external vessel cooling;
- Direct containment heating (DCH).

3. Five issues are assessed with low priority (could be closed after the related activities are finished):

- Corium coolability in core catcher with external cooling;
- Corium release following vessel rupture;
- Crack formation and leakages in concrete containment;
- Aerosol behaviour impact on source term (in steam generator tubes (SGT) and containment cracks);
- Core reflooding impact on source term.

4. Three issues could be closed because of low risk significance and sufficient current state of knowledge:

- Integrity of reactor coolant system and heat distribution;
- Ex-vessel core catcher and corium-ceramics interaction, cooling with water bottom injection;
- FCI including steam explosion in weakened vessel.

The phenomena described above are extremely complex; they generally demand the development of specific research. This research involves very substantial human and financial resources and, in general, the research field is too wide to allow investigation of all phenomena by any national programme. To optimise the use of the resources, the collaboration between nuclear utilities, industry groups, research centres and safety authorities, at both national and international levels is very important. This is precisely the main objective of the LACOMECO project, which aims to provide these resources and to facilitate this collaboration by offering four large scale experimental facilities at the Karlsruhe Institute of Technology (KIT) for transnational access.

These facilities are QUENCH, LIVE, DISCO, and HYKA. Their overall purpose is to investigate core melt scenarios from the beginning of core degradation to melt formation and relocation in the vessel, possible melt dispersion to the reactor cavity and to the containment, and finally hydrogen-related phenomena in severe accidents. The use of

these facilities will provide the interested partners of the European Member Countries and FP7 Associated States a focus on core quenching, on possible core melt sequences in the RPV, on melt dispersion and on hydrogen behaviour in the containment, to enhance the understanding of severe accident sequences and their control in order to increase the public confidence in the use of nuclear energy.

The main thrust of this project is towards large scale tests under prototypical conditions. These will help the understanding of core degradation and quenching, melt formation and relocation as well as core coolability in real reactors in two ways – firstly by scaling-up and secondly by providing data for the improvement and validation of computer codes applied for safety assessment and planning of accident mitigation concepts, such as ASTEC.

The importance of the LACOMECO project for the European research is reflected in three aspects:

1) The access to large scale experimental facilities is proposed to investigate all important processes from the early core degradation to late in-vessel phase pool formation in the lower head, continuation to ex-vessel melt situations and to the hydrogen behaviour in the containment. Therefore two high priority and three medium priority issues identified by the SARP group will be addressed in the project, namely
    - Core coolability during reflood and debris cooling (high);
    - Hydrogen mixing and combustion in containment (high);
    - Hydrogen generation during reflood and melt relocation in vessel (medium);
    - Corium coolability in lower head (medium);
    - Direct containment heating (medium).
2) The results of the project will be applicable to the European reactor fleet taking into account the main light water reactors including Eastern ones (VVER design). A European vision is used to decide priorities in the experimental programme.
3) The project offers a unique opportunity for Eastern experts to get an access to large scale facilities in Western research organisation to improve understanding of material properties and core behaviour under severe accident conditions, and to become familiar with the high level safety concepts in nuclear power plants.

Specifically, the access to LACOMECO platform shall provide answers to the following questions:

1) QUENCH: What are the main factors governing the hydrogen source term, formation and coolability of corium debris and melt behaviour during core quenching?
2) LIVE: What will be the time span of melt relocation to the lower plenum, what are the main phenomena governing the corium debris bed formation and what measures are needed to regain the in-vessel debris and core melt coolability?
3) DISCO: Where will the melt be located after failure of the RPV under moderate pressure, with different RPV failure modes? What is the pressure increase in the reactor pit, the sub-compartments and the containment due to thermal and chemical reactions (hydrogen production and burning)?
4) HYKA: Is the experimental and theoretical basis of predicting the turbulent combustion, flame acceleration and detonation onset in hydrogen/air mixtures sound enough and how can the hydrogen mitigation measures be improved?

To answer these questions the LACOMECO project will:

1) plan and carry out one experiment in the QUENCH facility that simulates as closely as possible key scenarios of a reactor core degradation for main classes of European light water reactors;

2) conduct one experiment in 1:5 scaled RPV geometry in the LIVE facility with different melt masses and relocation modes to study debris remelting and cooling mechanisms, to quantify heat flux distribution, crust formation and stability, and possible cooling modes;
3) perform one experiment in a scaled reactor geometry in the DISCO facility at prototypical pressures and temperatures to simulate melt dispersion in the containment after the RPV failure;
4) perform three experiments in the HYKA facility to investigate the hydrogen-related phenomena in severe accidents, including hydrogen distribution, hydrogen combustion and hydrogen mitigation measures.

SARP issues, which are addressed in the LACOMECO project are:

- Core coolability during reflood and debris cooling;
- Melt relocation into water, ex-vessel Fuel Coolant Interaction;
- Hydrogen mixing and combustion in containment;
- Hydrogen generation during reflood and melt relocation in vessel;
- Corium coolability in lower head.

At present, knowledge of various core melt sequences and the consequences of possible operator actions are not yet sufficient as they are too dependent on specific characteristics of the power plant under consideration. LACOMECO aims to provide the resources for a better understanding of possible scenarios of core quenching, different core melt sequences and hydrogen behaviour for different reactor designs. This knowledge shall lead to improved severe accident management measures, which are essential for reactor safety and in addition offer competitive advantages for the European industry.

The results of the experiments performed under the LACOMECO project will be distributed to the SARNET community and will be used for the development of models and their implementation in the severe accident codes such as ASTEC. This will help to capitalise the knowledge obtained in the field of severe accident research in the ASTEC code and the scientific databases, thus preserving and diffusing this knowledge to a large number of current and future end-users throughout Europe.

One of the main achievements of the SARNET NoE was the review and reassessment of the priorities on severe accident research issues on which research was still considered as necessary. The activities within the LACOMECO project will allow advancing considerably towards understanding and perhaps even closure of these issues. It will thereby optimise the resources (both available expertise and experimental facilities) to focus on these issues given the reduction of national budgets.

The project brings together competent teams from different countries with complementary knowledge. Moreover, the links with the East European research organisations and utilities will be established and maintained. Therefore, the project will offer a unique opportunity to join networks and activities supporting VVER safety, and for Eastern experts to get access to large scale experimental facilities in a Western research organisation. They will thereby improve their understanding of material properties, core behaviour, and containment safety under severe accident conditions. The work progress and achievements of the LACOMECO project are summarised below.

2 QUENCH FACILITY

Core coolability during reflood and corium debris cooling as well as in-vessel hydrogen generation during reflood and core melt relocation are ranked as *high and medium priority issues by the SARP group of the SARNET NoE*. Bundle experiments in the QUENCH facility are specifically designed to contribute to the reduction in uncertainties and increase in

understanding of these issues. This is necessary to reach a proper assessment of the risk posed by quenching of degraded core to full-scale power plants.

The QUENCH program [5] aims not only to determine the amount of hydrogen released during reflood of a test bundle with genuine core materials as cladding and spacer grids, but also to investigate the related high-temperature interactions of the core materials. The QUENCH bundle experiments are supported by an extensive separate-effects test programme which is performed to generate comprehensive data for model development and subsequent implementation into SFD computer codes.

The QUENCH test facility can be operated in two modes: (a) a forced-convection mode with steam or air flow together with argon and (b) a boil-off mode with the steam inlet line closed. The system pressure in the test section is usually around 0.2 MPa (max. 0.6 MPa). Quenching can be performed with water or saturated steam from the bottom. Top quenching is prepared in the design of the facility but has not yet been realised.

The main component is the test bundle that can be a standard PWR or e.g. a VVER -type. The PWR-type test bundle with a pitch of 14.3 mm is made up of 21 fuel rod simulators with Zircaloy-4 rod claddings and spacer grids whereas a VVER-type bundle consists of 31 rods arranged in a hexagonal lattice with a pitch of 12.75 mm. The VVER claddings and spacer grids are made of Zr1%Nb. Each bundle has a total length of approximately 2.5 m with a heating length of approximately 1 m. Heating is electric by tungsten heaters installed in the rod centre and surrounded by annular ZrO_2 pellets. Electrodes of molybdenum and copper connect the heaters with the cables leading to the DC electric power supply capable of 70 kW. The central rod is unheated and used for instrumentation or as absorber rod, e.g. B_4C or Ag-In-Cd to study their influence on core degradation. The test bundle is surrounded by a 2.38 mm thick shroud of Zircaloy together with a 37 mm thick ZrO_2 fibre insulation that extends to the upper end of the heated zone and a double-walled cooling jacket of stainless steel/Inconel. Corner rods are inserted in the bundle to adapt the bundle hydraulic diameter. These rods made of the same material as the rod claddings are either used for thermocouple instrumentation or as probe which can be withdrawn from the bundle anytime during the test to check the degree of oxidation. The test rods are filled to ~0.22 MPa (maximum 0.6 MPa) with tracer gases, e.g. Kr or He, to detect the onset of the rod failure with the mass spectrometer at the off-gas pipe.

Up to now, 15 bundle tests have been conducted; the main topics investigated are: hydrogen source term during reflood, influence of B_4C [6] and Ag-In-Cd control rods [7] on bundle degradation, effect of air ingress [8] on oxidation and degradation of the core, and specific behaviour of VVER bundle geometry [9] and materials during oxidation and reflood. One test was performed with the complete sequence including boil-off phase, pre-oxidation and reflood. The QUENCH experiments will focus on the analysis of the relocation of cladding and fuel and the formation and cooling of in-core debris beds to gain information on the characteristics of the created debris particles. The main objective of these tests is the investigation of these processes under prototypical boundary conditions for a whole bundle.

As a result of the evaluation of the User Selection Panel the QUENCH test with slow oxidation in air was selected. The test (QUENCH-16) was proposed by KFKI/AEKI, Budapest, Hungary, and was successfully conducted in July 2011 [10].

2.1 Background

The high temperature interaction of fuel materials with air results in intense oxidation and nitriding of zirconium components [11]. The oxidation heat can lead to temperature excursion and to the acceleration of bundle degradation. In case of severe reactor accidents air may have access to the core after lower head failure. Air oxidation can be expected in open reactor and spent fuel storage pool accidents as well. The safety significance of air ingress scenarios is emphasized by the formation of gaseous fission

product oxides (e.g. ruthenium), which can dramatically increase the release of radioactive materials from the damaged fuel.

The QUENCH-16 bundle test with air ingress focussed on the following phenomena:

- Slow oxidation and nitriding of zirconium in high temperature air,
- Formation of oxide and nitride layers on the surface of Zr,
- Breakaway oxidation of Zr in air, formation of spalling oxide scale,
- Reflooding of oxidised and nitrided bundle by water, release of nitrogen.

2.2 Pre-test calculations

The determination of the test protocol aimed at achieving the objectives was based on planning calculations by PSI (SCDAP/RELAP5), GRS (ATHLET-CD), and EDF (MAAP-4) [12]. A summary of these calculations is given in Table I. In addition to the definition of the electric power vs. time curve, the main outcome was that the intended oxygen starvation period could be reached only with low air flow rates of approx. 0.2 g/s. None of the applied codes predicted temperature escalation during the reflood phase.

Table I: Summary of pre-test calculations for the QUENCH-16 experiment.

	PSI (SCDAPSIM with PSI air))	GRS (ATHLET-CD)	EDF (MAAP)
Heat-up +Pre-oxidation	0-5000 s 10 kW 3 g/s steam 3 g/s Ar	0-2000-5000 s 3.85 → 10 kW 3 g/s steam 3 g/s Ar	0-5000 s 10 kW 3 g/s steam 3 g/s Ar
Cooldown	5000-6000 s 4.0 kW 3 g/s steam 3 g/s Ar	5000-6000 s 4.0 kW 3 g/s steam 3 g/s Ar	5000-6000 s 4.0 kW 3 g/s steam 3 g/s Ar
Air	6000-ca.11700 (9260) s 4.0 kW 3 (1) g/s Ar 0.2 g/s air	6000-13500 s 4.0 kW 3 (1) g/s Ar 0.2 g/s air	6000-9000 s 4.0 kW 3 g/s Ar 0.2 g/s air
Quench	11700 (9260) s (at 1823 K) 0/4 kW Fast injection, then 50 g/s water	12470 (9420) s (at 1823 K) 0 kW Fast injection, then 50 g/s water	9000 s (at 1823 K) 0 kW Fast injection, then 50 g/s water
Max. oxide after pre-oxidation	186 µm	190 µm	ca. 242 µm
Duration air phase	5700 (3260) s	6470 (3420) s	3000 s
Duration oxygen starvation	3270 (1540) s	470 (920) s	1100 s
Remarks	- shorter air phase and almost no starvation for 0.5 g/s air - no influence of 0/4 kW during quench	- rapid temp. increase for 0.5 g/s air to >2000 K - activation of ZrN model causes higher temperatures and longer starvation time	- no variation of gas flow rates

2.3 Test conduct and first results

In common with the previous QUENCH experiments, the bundle was heated by a series of stepwise increases of electrical power (Figure 1) from room temperature to a maximum of ~600 °C in an atmosphere of flowing argon (3 g/s) and superheated steam (3.3 g/s). The bundle was stabilised at this temperature, the electrical power being ~4 kW. During this time the operation of the various systems was checked.

In a first transient, the bundle was heated by power increase to about 1200 °C, reached at ca. 4000 s. This marked the start of the pre-oxidation phase to achieve a maximum

cladding oxidation of up to 200 µm. The power was controlled via small increments from 10 kW to 11.5 kW, to maintain more or less constant temperatures. In line with pre-test planning calculations about 14 g of hydrogen were produced in this phase which lasted until 6300 s. At this point the power was reduced to 4 kW which effected a cooling of the bundle to 790 °C, as a preparation for the air ingress phase. This phase lasted 1000 s, until 7300 s. Towards the end of this phase, one of the corner rods was extracted from the test bundle for determination of the oxide thickness axial distribution. Preliminary measurement showed a maximum oxide thickness of 133 µm in the bundle what was within the target band.

In the subsequent air ingress phase, the steam flow was replaced by 0.2 g/s of air, and the argon flow was reduced to 1 g/s. The power was maintained at 4 kW. The change in flow conditions had the immediate effect of reducing the heat transfer so that the temperatures began to rise again.

After some time measurements demonstrated gradually an increasing consumption of oxygen, accompanied by acceleration of the temperature increase at certain locations starting at about 10200 s. The faster increase was most marked at the mid elevations of the bundle. Oxygen was completely consumed at 10500 s. Shortly before that time, partial consumption of the nitrogen was first observed, indicating local oxygen starvation which promoted the onset of nitriding. Following this, the temperature continued to increase until water injection was initiated at 11335 s when the maximum observed temperature was ca. 1600 °C at the 650 mm elevation. Thus there was a period of 835 s complete oxygen consumption and hence starvation in at least part of the bundle (Figure 2). The total uptakes of oxygen and nitrogen were about 58 and 29 g, respectively. The generally limited rate of temperature increase was the result of a rather low air flow rate, probably not untypical of reactor or spent fuel pond conditions.

Toward the end of the air ingress phase a second corner rod was removed. Some local spalling of the oxide scale was observed from preliminary examination at elevation 300-900 mm. The oxidation and nitriding state has yet to be determined, from corner rod and bundle examinations.

Then reflood was initiated at 11335 s by simultaneously turning off the air flow, switching the argon injection to the top of the bundle, first rapidly filling the lower plenum of the test section with 4 kg of water, and continuing by injecting 53 g/s of water. The power remained at 4 kW during the reflood.

Almost immediately after the start of reflood there was a temperature excursion in the mid to upper regions of the bundle (500 to 1400 mm), leading to maximum measured temperatures of about 2150 °C. Some bundle degradation is to be expected at these temperatures. Cooling was established at the hottest location ca. 70 s after the start of injection, but was delayed further at other locations. Reflood progressed rather slowly, perhaps due to the high temperatures and partial degradation, and final quench was achieved after about 500 s. In line with the temperature escalations, a significant quantity of hydrogen was generated during the reflood. There are also indications of nitrogen release during the quench phase.

The shroud experienced similar temperatures to the bundle. As would be expected at such temperatures, the shroud failed ca. 40 s after initiation of reflood. Detection of Kr by the mass spectrometer indicated a first small failure of a fuel rod simulator soon after the start of oxygen starvation during the air ingress phase, and quite possibly further failures also during this phase. The first videoscope inspection at the position of withdrawn corner rod B shows an intensive degradation of the oxide layer with partial spalling at bundle elevations between 450 and 750 mm. A preliminary inspection of the withdrawn corner rods indicated that pre-oxidation was as desired.

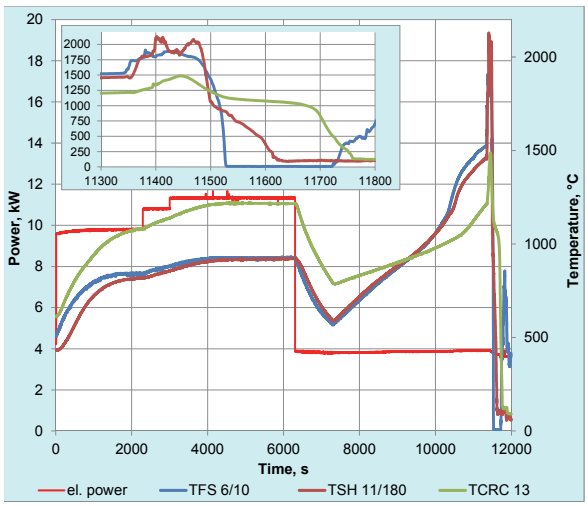

Figure 1: QUENCH-16 test conduct showing electric power input and selected temperatures.

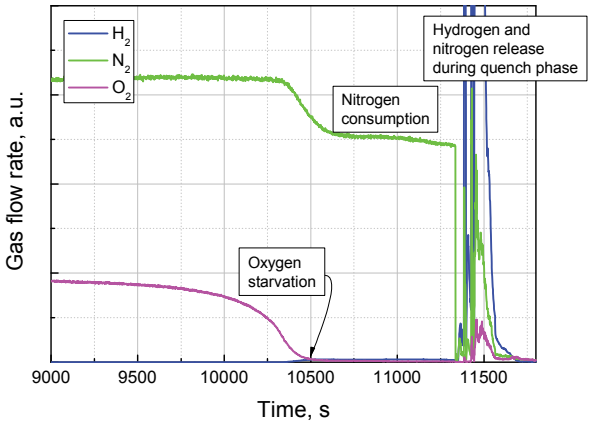

Figure 2: Off-gas analysis showing consumption of oxygen and nitrogen during air ingress phase and release of hydrogen and nitrogen during quench phase.

After the test the facility was dismantled for post-test examinations which include investigation by videoscope, embedding in epoxy resin, and metallographic examination with optical and, if necessary, scanning electron microscope. In parallel, the recorded data are being processed for further analyses by participants within the LACOMECO and SARNET programmes. The test will be used for benchmark calculations in the WP5-COOL of SARNET2.

3 LIVE FACILITY

Cooling of core debris and behaviour of the stratified corium melt pool in the lower head are still critical issues in understanding of PWR core meltdown accidents [13], [14]. They were ranked as *high and medium priority issues by the SARP group of the SARNET NoE.*

A number of studies have already been performed to pursue the understanding of a severe accident with core melting, its course, major critical phases and timing and the influence of these processes on the accident progression. Uncertainties in modelling these phenomena and in the application to reactor scale will undoubtedly persist. These include e.g. formation and growth of the in-core melt pool, relocation of molten material after the failure of the surrounding crust, characteristics of corium arrival in residual water in the lower head, corium stratifications in the lower head after the debris re-melting. These phenomena have a strong impact on a potential termination of a severe accident.

The main objective of the LIVE program at is to study the late in-vessel core melt behaviour and core debris coolability both experimentally in large scale 3D geometry and in supporting separate-effects tests [15], and analytically using CFD codes [16] in order to provide a reasonable estimate of the remaining uncertainty band under the aspect of safety assessment.

The main part of the LIVE test facility is a 1:5 scaled RPV of a typical pressurized water reactor. The inner diameter of the test vessel is 1 m and the wall thickness is 25 mm. The material of the test vessel is stainless steel. To simulate the decay heat, heaters are used, which provide in different layers a representative and homogeneous heating of the melt in the lower head. The core melt is simulated by different materials. These materials should, to the greatest extent possible, represent the real core materials in important physical properties and in thermo-dynamic and thermo-hydraulic behaviour. Important criteria are that the simulant melt should be a non-eutectic mixture of several components with a

distinctive solidus-liquidus area of about 100 K, and that the simulant melts should have a similar solidification and crust formation behaviour as the oxidic corium. To investigate special problems a mixture of nitrates is used with a melting temperature of about 350 °C, and with a phase diagram similar to the expected core melt. To study the debris melting and coolability, the use of V_2O_5 oxide is planned with a melting temperature of approximately 1000 °C. These compositions provide a sufficiently high melting temperature and, due to their phase diagram, allow a comparison with the core melt in various scenarios of core meltdown.

Due to the ability to flood the melt in-vessel, the possible cooling the melt due to particle bed formation and/or gap cooling with a resulting stop of the anticipated accident can be investigated at different stages of the accident scenario.

The information obtained from the LIVE experiments includes heat flux distribution along the reactor pressure vessel wall in transient and steady state conditions, crust growth velocity and influence of the crust formation on the heat flux distribution along the vessel wall. Supporting post-test analysis contributes to characterization of solidification processes of binary non-eutectic melts [17]. Complementary to other international programs with real corium melts (like METCOR-P, PRECOS, and INVECOR projects of the International Science and Technology Center (ISTC)), the results of the LIVE experiments provide data for a better understanding of in-core corium pool behaviour. The results of the LIVE experiments allow a direct comparison with findings obtained earlier in other experimental programs (SIMECO, ACOPO, BALI, etc.) and are being used for the development and assessment of mechanistic models for description of in-core molten pool behaviour and their implementation in the severe accident codes such as ASTEC. Moreover, the obtaining of 3D data has become more important, as it is now clear that the direct extrapolation of the results of 2D experiments may be inappropriate.

As a result of the evaluation of the User Selection Panel the test aimed at investigation of dissolution kinetics of a pure KNO_3 crust by a $KNO_3/NaNO_3$ melt was selected (LIVE-CERAM). The test was proposed by CEA, Grenoble, France.

3.1 Background

The experiment aims at examination the dissolution kinetics of a pure KNO_3 crust by a $KNO_3/NaNO_3$. There exist only scarce data on corium/refractory material interaction. Former experiments addressed mainly the final steady state situation or used smaller scales. No detailed data are available for transient corium/refractory material interaction in 3D geometry. This will be an excellent simulation of the refractory core-catcher ablation by a lower temperature multi-component melt in a severe accident addressing *two SARP issues: corium coolability in lower head, and ex-vessel melt pool configuration during MCCI*. Pre-test and post-test analysis will be done by KIT (CONV code) and CEA (various models). This is a good example of a use of in-vessel facility for an ex-vessel research and so increasing the value and application of the facility. The project will require 2 tests with a precursory test to produce the refractory layer and this will give additional data on single component melt behaviour in comparison with multi-component melts.

There is large interest of the international scientific community for core-catcher design methodologies considering not only steady state situations but also transient behaviour. However, only scarce data exist on corium-refractory material interaction for the design of refractory liners for core catchers and for protection of concrete walls which should be applied in LWRs and LMFBRs. The experiments at CIT (Saint Petersburg) addressed mainly the final steady state situation. Simultaneous Corium-Concrete-Zirconia Interaction experiment has been performed by AREVA (Erlangen) in small scale [18]. No detailed transient data are available for corium-refractory material interaction for 2D geometry.

Based on this background LIVE-CERAM experiment will provide data of transient 2D corium-refractory material interaction. The experiment should simulate the ablation process of a high-melting temperature refractory material by low-melting temperature corium. Due to the dissolution of the refractory material into the boundary area and in the bulk corium, the boundary layer and the bulk melt are expected to be gradually enriched in the refractory material, which leads to an increase of bulk melt melting temperature and boundary temperature.

In the LIVE-CERAM experiment, the initial pure KNO_3 (melting temperature of ~340°C) simulates the refractory material, and the eutectic mixture of 50 mol% KNO_3 - 50 mol% $NaNO_3$ (melting temperature of ~222°C) simulates the corium. A ~8 cm crust of pure KNO_3 should be firstly generated along the semi-spherical vessel wall; afterwards the eutectic melt is poured in the vessel. During the ablation process, the liquid melt is homogenous heated and its temperature should not exceed the melting temperature of the pure KNO_3. The evolution of melt temperature and interface temperature are measured at several latitudes.

3.2 Definition of the experimental performance

The test conditions have been defined as following:

<u>Generation of KNO_3 crust:</u>

- The heating basket and all the heating elements should be repositioned 63 mm higher, so that the gap between the heating elements and the vessel wall is 8 cm (Figure 3). Heating elements remain in the vessel during the creation of the crust.
- The KNO_3 melt will be poured into the vessel and heterogeneously heated. The power density in the lower part of the pool will be higher than the upper part. After the desired crust thickness is reached the melt will be extracted. Since a gap will be formed between the crust and the vessel wall after cooling down, the gap will be filled by pouring KNO_3 melt in the vessel again and overflowing the original crust. The vessel is externally cooled by water with flow rate of 1.3 kg/s during crust formation. No external water cooling will be performed during the gap filling.
- The height of KNO_3 crust is 435 mm and the height of the eutectic melt pool is 385 mm to avoid the overflow of the liquid melt into the gap between the vessel and the KNO_3 layer.
- Four thermocouple trees are mounted at polar angles 0°, 37°, 52° and 66°. The distance between neighbour thermocouples is 0.5 cm at polar angle 52° and 66°, and 1 cm at polar angle 0° and 37°. The length of the trees will be ~10 cm (2 cm longer than the layer thickness of the KNO_3 crust).
- The vessel is externally cooled by water with flow rate of 1.3 kg/s.

<u>Ablation test:</u>

- The melt pouring temperature is about 260°C. The maximum melt pool temperature is 330°C, which is slightly lower than the melting temperature of KNO_3 (334°C). The maximum heating element surface temperature is allowed to be slightly higher than the maximum bulk melt temperature.
- The melt is heated with 7 kW homogenously at beginning. If the melt temperature reaches 330°C after some time, the heating power will be reduced. After the decrease of melt temperature the heating power will be increased to 7 kW again and will be kept at this level until the steady state will be reached.
- The criterion for the end of the test is the approach of steady melt temperature and the steady crust temperature at polar angles 52° and 66°.
- Melt samples are taken every 15 minutes at beginning and then every 30 minutes. Residue crust will be analysed after the test.
- Two measuring positions with the crust detection lance are foreseen.

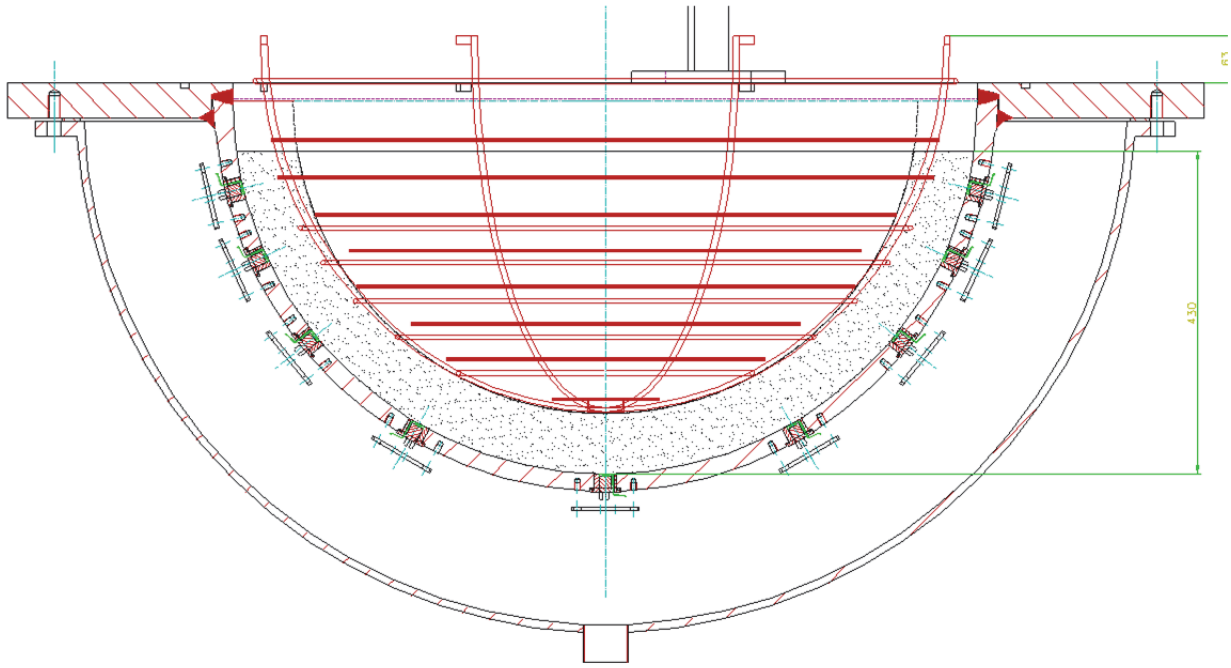

Figure 3: Position of the heating basket for the generation of 8 cm thick crust layer.

Due to the complexity of the experiment such as substantial modifications of the test facility and the heating system, there is necessity to perform additional pre-tests to check the feasibility of crust generation method and pre-test calculations. Up to now, a number of pre-tests were performed [19]. The aim was to gain experience on building the KNO_3 crust including extraction procedure and facility performance. The test will be performed in January 2012. Test results will be distributed to SARNET2 WP5-COOL and WP6-MCCI partners for analysis and interpretation.

4 DISCO FACILITY

The DCH issue was assessed as *medium priority by the SARP group of the SARNET NoE* meaning that the programmes are to be continued as planned or at reduced effort. The involved SARNET partners (KIT-G, IRSN, GRS, EDF and TUS) concluded that the uncertainty in the code calculations is still too large to assess the risk of containment failure for certain reactor geometries due to the lack of validated models, especially for the extrapolation to reactor scale [20].

When the reactor cavity is flooded with water, the situation is less clear. Most of the studies are related to the Fuel Coolant Interaction that can turn to a strong steam explosion. FCI was rated as *high priority*. All experiments related to FCI are performed with conditions with low velocity jets (gravitational pour). However, in a real ex-vessel situation, it is possible that the vessel is still pressurized at its failure time, which induces, even for low pressure, a melt ejection with high velocity. Also, the water in the pit is relatively confined and cannot so easily escape from the pit. There is then a lack of data to validate the models in such situations.

The DISCO facility was initially designed to perform scaled experiments related to DCH that simulate melt ejection from the RPV to the reactor cavity after the RPV failure under low system pressure during severe accidents in LWRs [21]. These experiments are designed to investigate the fluid-dynamic, thermal and chemical processes during melt ejection out of a breach in the lower head of an LWR pressure vessel at pressures below 2 MPa with an iron-alumina thermite melt (~2000 °C) and steam. The position, size and shape of the failure can be varied. The containment is modelled by a pressure vessel with a volume of

14 m^3, rated at 1 MPa. The combined volumes of the reactor pressure vessel and reactor cooling system are modelled by a vessel with a volume of 0.08 m^3, rated at 2 MPa and 220 °C. The geometry of the reactor pit and reactor sub-compartments is adapted according to the investigated reactor type. The atmosphere in the containment is variable (inert, air, steam or a mixture, including hydrogen). The consequences of DCH are essentially related to the reactor cavity geometry, therefore an experimental database has been established for the plant types EPR, French PWRs, German KONVOIs and some of VVERs [22]. For other plant specific geometries the experiments must still be conducted.

As a result of the evaluation of the User Selection Panel a test aiming at investigation of ex-vessel fuel coolant interaction experiment in the DISCO facility was selected (DISCO-FCI). The test was proposed by IRSN, Fontenay aux Roses, France, to bring additional data with a geometrical configuration more closely related to the reactor situation.

This experiment represented a FCI test as much as a DCH and is of great interest to reactor safety The main phenomena are the use of the Fe-Al_2O_3 thermite melt in a steam/air/hydrogen atmosphere and the injection of the melt under pressure into the flooded pit. This pressured melt injection into the water is also an aspect that is relatively little researched. This is linked to fuel coolant interaction (WP7.1) and to debris formation (WP5.3) as well as MCCI (WP6.3) and hydrogen behaviour in containment (WP7.2) of SARNET2. This is also linked to the OECD SERENA-II project. Although there is a certain risk of steam explosion, the risk was considered as low because of the strength of the facility construction as well as the probability of its occurrence (no external triggering and limited mass of melt).

This experiment is part of a series with 3 other tests funded by IRSN, with the major objectives being to:

- confirm/infirm the behavior of the flow computed with MC3D code where relatively strong spontaneous interactions are reported during premixing (no triggering);
- characterize the debris;
- estimate the hydrogen production;
- assess the possibility of combustion in such situation.

The test was not triggered (for the purpose of obtaining a steam explosion) and only the premixing was investigated. However, a spontaneous explosion could have happened. In order to facilitate the analysis, it was not requested, in contrast with the usual requirement in DISCO DCH tests, to have a precise fully representative reactor geometry. The purpose of the tests is clearly to highlight a physical behavior and to help for the code qualification. Therefore a simplified 2D geometry of a large pit with no access corridor was considered (Figure 4 and Figure 5) and central break at the RPV bottom was investigated.

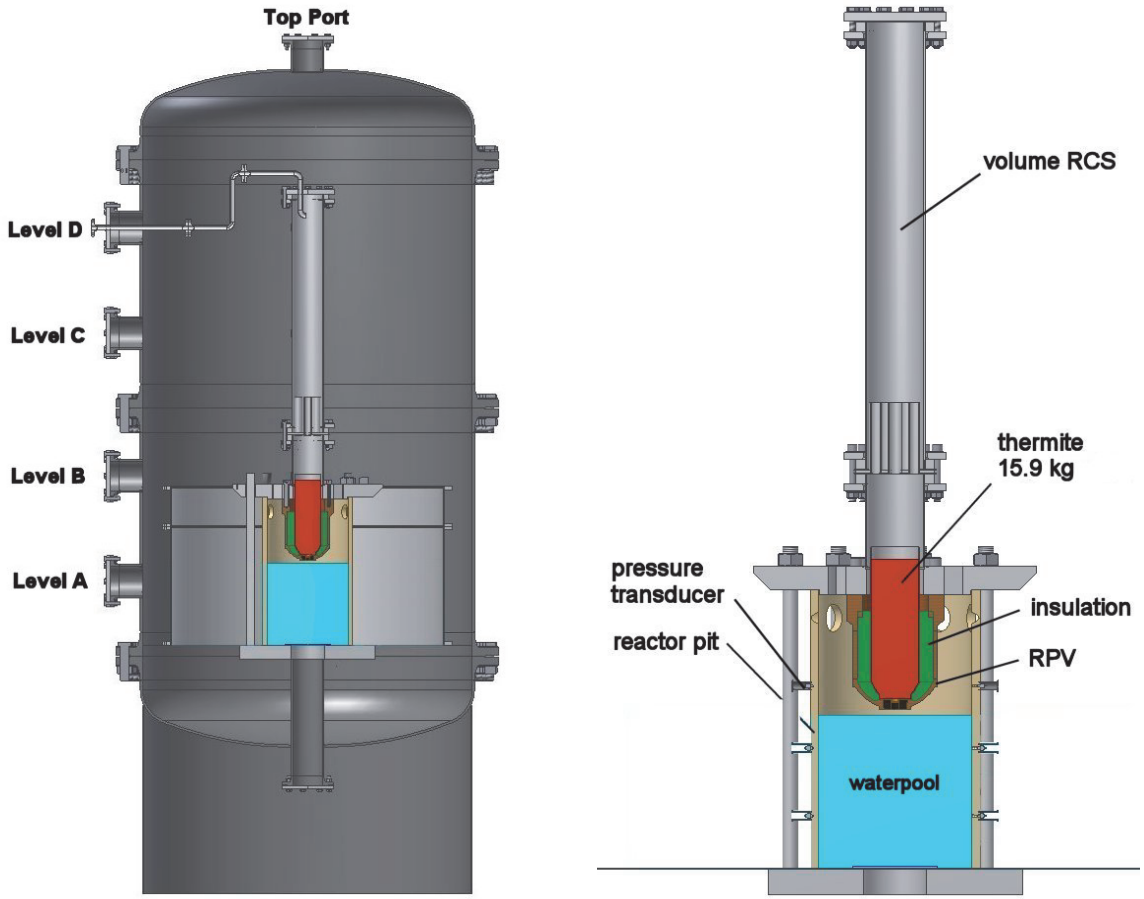

Figure 4: Containment pressure vessel and internal structures of RPV/RCS vessel and cavity.

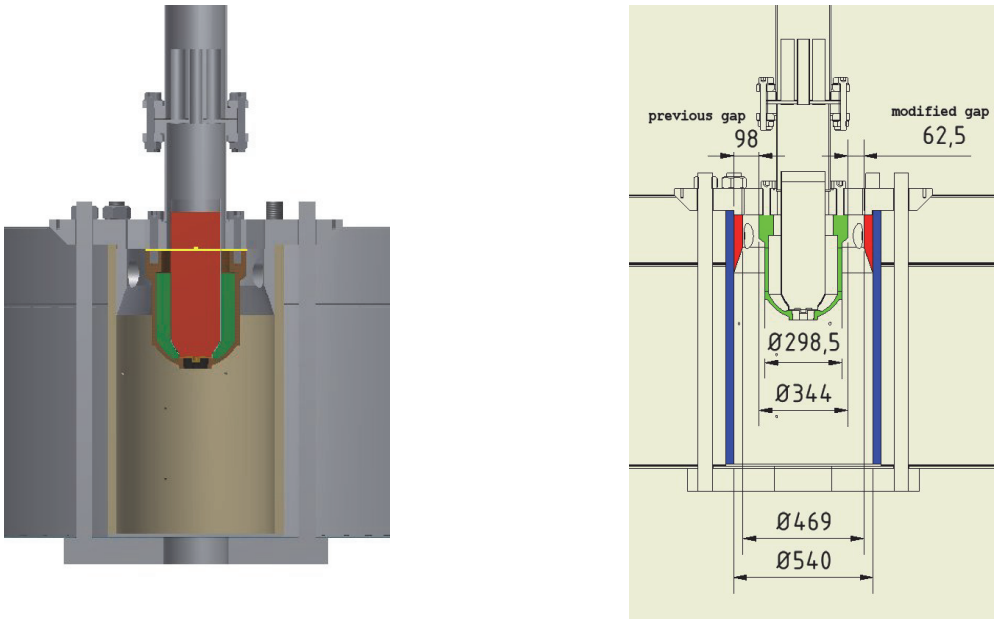

Figure 5: Scheme of RPV and dimensions of the cavity.

Geometry and initial conditions of the test are given in Table II.

Table II: Geometry and initial conditions of the DISCO-FCI test.

Containment volume	m^3	13.88	Containment pressure	MPa	0.2
Containment height	m	4.5	Containment temperature	°C	100
Containment diameter	m	2.17	Containment atmosphere		Air/Steam
Cavity volume	m^2	0.2034	RPV: Breach diameter	mm	30
Cavity height	m	0.984	RPV: Driving pressure	MPa	0.6
Cavity diameter	m	0.540	RPV: Amount of thermite	kg	10.64
Flow nozzles (8x cut out area)	m^2	0.0603	Water pool	l/°C	125 / 85
Flow area into con. (8 holes)	m^2	0.0688			

The test results include:

- conditions at the end of interaction: melt dispersal, water dispersal;
- characterization of melt debris (fragmented part, size spectrum);
- break opening characteristics;
- measurements of pressures (RPV/RCS vessel, cavity, containment vessel);
- measurements of temperatures (RPV/RCS vessel, cavity, containment vessel);
- gas composition to determine the amount of hydrogen produced by oxidation of the melt.

Pressures measured in the cavity and in the containment are given in Figure 6 and Figure 7. Shortly after the ignition, the temperature in the RPV rises very sharply and the pressure also increases but levels again before the valve connecting the accumulator opens. The pressure in the RCS/RPV and in the accumulator balances at about 0.8 MPa for a short period. This is 0.2 MPa more than the planned pressure at the time of blowdown. However, the pressure increases again up to 1.0 MPa then the brass melt plug evaporated and the blowdown starts. Due to the melt-water reaction, the pressure in the cavity shows some peaks during the first 0.3 seconds. Only one peak reaches a maximum of 0.31 MPa. The water in the cavity completely swept out into the containment and the pressure in the vessel rises up to 0.24 MPa. The containment gas temperature increased from about 100 C to about 114°C during the first second. At late times (> 8 s) some thermocouples registered a local increase to 130 C, all positioned higher than 170 cm above floor.

Size distribution of particles collected in the cavity, subcompartments and in the containment is presented in Figure 8. Of the melt ejected out of the RPV, 70 % were found in the cavity, mainly as crusts, and approximately 27 % each in the subcompartment and containment vessel. Since the subcompartment was not covered, no clear separation between the two locations can be drawn.

Analysis of the experiment is on-going and the results will be distributed to SARNET2 WP5 and WP7 partners for analysis and interpretation.

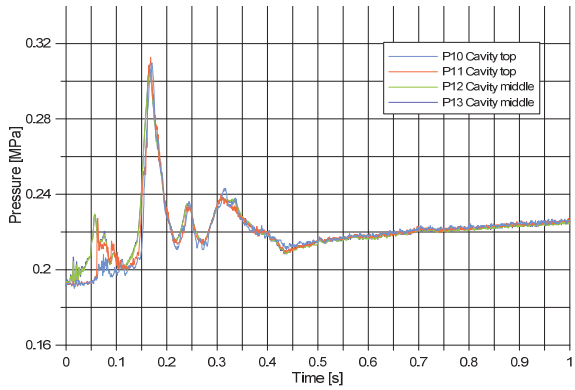

Figure 6: Pressures in the cavity.

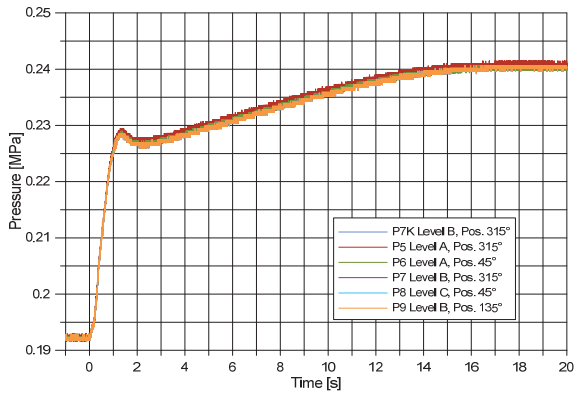

Figure 7: Pressures in the containment.

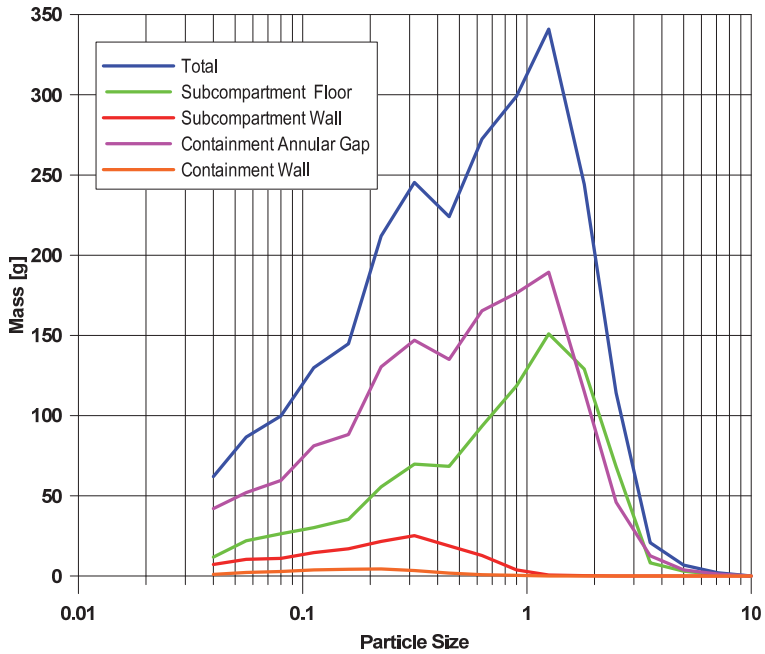

Figure 8: Particle size distribution in DISCO-FCI test.

5 HYKA FACILITY

In the case of a severe accident with and without failure of the reactor pressure vessel, the containment is the ultimate barrier to the environment. The HYKA facility provides unique research capabilities for investigation of hydrogen related phenomena in containment during severe accidents: hydrogen distribution, hydrogen combustion and hydrogen mitigation measures. In this work package phenomena are addressed that are ranked as *high priority issue by the SARP group of the SARNET NoE.*

HYKA offers experimental possibilities for containment safety research in Europe through a number of large test vessels which are qualified and approved for operation with hydrogen combustion. The tests can be made under uniform stagnant or non-uniform dynamic conditions, as well as in horizontal or vertical orientation. In HYKA it is possible to investigate the whole spectrum of hydrogen phenomena. Research on different hydrogen sources and their distribution behaviour can be conducted, as well as experiments with different ignition sources in different geometries. One of the most attractive features of

HYKA is the capability for well-controlled, medium to large scale combustion experiments, covering all three combustion regimes (subsonic and sonic deflagration and detonation).

An important outcome of the research activities in the DCH domain within SARNET was the understanding, that the combustion of hydrogen produced by oxidation during melt ejection from the RPV as well as of the hydrogen initially present in the containment can be the dominant phenomenon for containment pressurization. It is now clear that the uncertainty in the combustion rate under these conditions was too large for the assessment of containment integrity for certain reactors. Dedicated combustion codes (e. g. COM3D) are presently not capable to reproduce the results obtained in a first series of experiments with hydrogen release conducted in the DISCO facility at KIT. Moreover, the need for hydrogen combustion tests at a scale larger than 1:18 was stressed by the SARNET partners. Without those, the uncertainty in the extrapolation of experiments to reactor scale would still remain too large to assess the containment integrity for certain reactor geometries. This issue can be addressed in the experiments performed in the e.g. A2 vessel of the HYKA facility.

As a result of the evaluation of the User Selection Panel three experimental series were selected.

5.1 Detonations in partially confined layers of hydrogen-air mixtures (DETHYD)

These experiments were proposed by WUT, Warsaw, Poland and were successfully completed in March 2011. This work will continue a series of experiments on critical conditions of flame acceleration and detonation transitions in a semi-confined horizontal layer of hydrogen-air mixtures in presence of obstructions [23], [24] with a difference that proposed work will be done without obstructions. The objective of current tests was to investigate critical layer thickness for hydrogen-air detonation propagation in semi-confined geometry. Semi-confined combustion scenarios are very important from practical point of view because light, flammable gas released in confinement will accumulate at the top of the room. These phenomena may take place in containments of nuclear reactors or in tunnels. When detonation propagates in smooth tube, the critical tube diameter d* is in a relation with detonation cell size λ: $d^* \cong \lambda$. Critical thickness h^* and its relationship with λ for semi-open geometry is unknown.

In the experiments a rectangular 3 x 9 m channel with various gas layer thickness of 8, 5, 3 and 2 cm was used. The hydrogen-air mixture layer thickness was controlled by thin (10 µm) plastic film. The channel was placed in cylindrical 100 m^3 safety vessel as shown in Figure 9 and Figure 10.

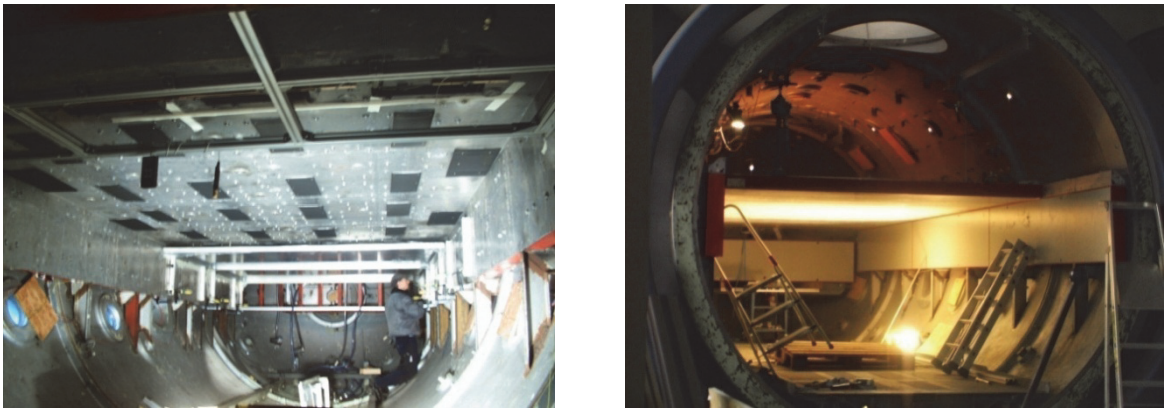

Figure 9: The investigated geometry placed in safety vessel (sooted plates visible at the ceiling – left side picture).

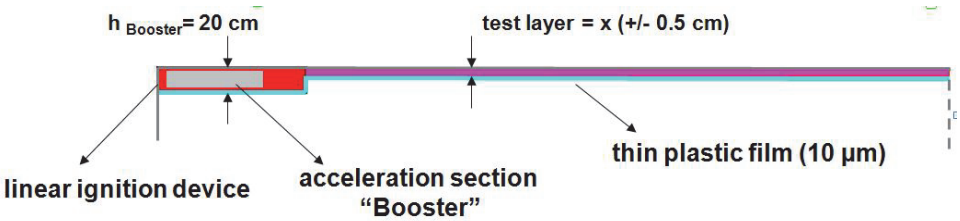

Figure 10: Cross-section of the investigated geometry.

To assure uniform flame and detonation front special "linear ignition device" with exploding wire and 60 cm length acceleration section were developed. Due to the acceleration section run-up distance for detonation was lower than 1 m. Instrumentation was composed of 15 dynamic pressure transducers (13 at the top – along the ceiling symmetry line, 2 on the ground), 20 ionization sensors and 48 sooted plates (40 in test section, 8 in "booster"). The sooted plates were used to indicate detonation propagation range in the test layer.

The conducted experiments show that critical thickness h^* of flammable hydrogen-air mixture is equal to 3 cm (see Table III), which corresponds to the relation with detonation cell size λ: $h^* \approx 3\lambda$. In one case with 3 cm layer thickness detonation attenuation was recorded at the distance lower than 2 m. At the second test for 3 cm layer thickness detonation propagates up to the end of the tested geometry. For 2 cm layer, detonation failed at the distance lower than 1 m.

Table III: Main results of DETHYD experiments.

Test #	% H_2	Layer thickness [cm]	Detonation propagation?	Detonation range in test layer (specified by sooted plates)
1	30	8	Yes	Up to the end
2	30	5	Yes	Up to the end
3	30	3	No	< 2 m
4	30	3	Yes	Up to the end
5	30	2	No	< 1 m

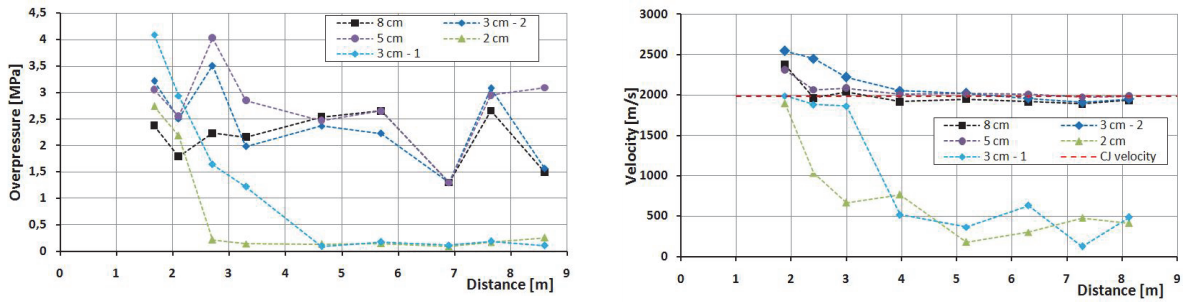

Figure 11: Overpressures and velocities for different layer thickness.

Recorded pressures and velocities (Figure 11) confirm that for 2 cm and 3 cm (test 1) layer thickness detonation attenuation occurs. For these cases detonation propagation ranges are in accordance with sooted plates indications. After detonation, attenuation velocities

vary in the range of 150 - 600 m/s, overpressures are in the range of 0.1 – 0.25 MPa which corresponds to the fast deflagration regime. For the cases with detonation present up to the end of the geometry, overpressures are in range of 1.3 – 3.1 MPa and velocities are ~ 2000 m/s, which corresponds to the stable C-J detonation regime.

5.2 Hydrogen concentration gradients effects understanding and modelling with data from experiments at HYKA (HYGRADE)

These experiments were proposed by CEA, Saclay, France. The main objective will be to investigate H_2 combustion in hydrogen concentration gradients and with obstructed geometries prototypical of conditions in PWR containments. These will be tests with ignition with a decreasing H_2 concentration gradient and ignition with an increasing H_2 concentration gradient. The forthcoming experiments will extend previous experimental data on the flame propagation in non-uniform hydrogen-air mixtures with decreasing or increasing hydrogen concentration gradient [25], [26]. The main objective is to obtain well-qualified data on flame propagation regimes in non-uniform hydrogen-air mixtures in large-scale for validation of CASTEM code developed at CEA.

The experiments on flame propagation regimes will be performed in an obstructed large scale facility A3 with vertical hydrogen concentration gradient. The processes of flame acceleration from quasi-laminar to sonic flames or even detonations will be investigated depending on hydrogen concentration gradient and ignition positions. Positive and negative concentration gradient in the range from 8% to 13% of hydrogen in air will be tested. Critical conditions for flame acceleration-deceleration and quenching of the flame due to hydrogen concentration gradient will be main scopes of the project.

A serious reconstruction of the A3 vessel is already started. This includes fabrication of two flanges (of 1 m outer diameter) at the top of the vessel and a system of obstacles with varied blockage ratio (BR = 0.3 and BR = 0.6). All previously made metal structures inside the vessel A3 like ramps with hand rails have been extracted from the vessel to provide regular geometry of obstructions. Two possibilities to fabricate the obstacles structure are considered: (1) removable wooden obstacles; (2) stable metal obstacles like metal grid or metal plates fixed on thick metal rods. First option means one time use of the obstacles per experiment but it is less expensive. Geometry of obstacles, minimum orifice size as well as material has to be agreed with CEA.

Preliminary “cold” experiments (without ignition) on helium (or hydrogen) distribution in presence of obstacles are planned for September. Gas filling system to create the linear helium/hydrogen distribution is designed. The problem is to provide a linear ascending/descending hydrogen concentration profile in vertical/axial direction the and quite uniform hydrogen concentration in horizontal level. The gas filling system will be tuned against experimental helium/hydrogen distribution to provide required concentration gradient. A sampling probes method will be used to control real distribution of light gas (helium/hydrogen). In order to visualize the light gas distribution in smaller scale (1:50) with the same aspect ratio (H/D) can be done with transparent cylinder model using high speed shadow photo Background Oriented Schlieren (BOS) method.

Pressure sensors (PCB type), silicon photodiodes and ion probes are planned to be used in forthcoming experiments with hydrogen combustion. Several sampling probes will control required hydrogen concentration gradient just before each experiment. Amount of sensors and their position will be specified by KIT and CEA. The data acquisition system with 1 MHz sampling rate will be used to record pressure, light and ion probe signals. The result will be a pressure- or light- or ion current signal-time history.

5.3 Upward flame propagation experiment in air-steam-hydrogen atmosphere (UFPE)

These experiments were proposed by JSI, Ljubljana, Slovenia. The main goal of these experiments is the scaling-down of hydrogen combustion phenomena in a containment of nuclear reactor for numerical code validations. THAI facility experiments [27] are going to be reproduced in about four times larger scale facility A2 in order to compare both data with the purpose to study scaling effect on integral combustion characteristics like maximum combustion pressure and temperature, time of combustion or hydrogen consumption rate. The problem to be solved is to answer can the phenomena observed in a scaled-down experimental facility be extrapolated to an actual containment, and, if yes, how should that extrapolation be performed.

The experiments will be performed in the A2 vessel of HYKA of the IKET test side (total volume V = 220 m^3, internal diameter D = 6 m, height L = 9.1 m) in order to study upward propagation. Initial experimental conditions of the reference THAI experiment have to be prepared inside the A2 vessel: pressure 1.5 bar; temperature 90 ^oC; 10% hydrogen/air mixture with 25% of steam; lower ignition position.

Several principal measures have to be done to provide the required experimental conditions. The vessel has to be equipped with gas filling system including steam-generator. The gas filling procedure can be the following: (1) preparing of dry hydrogen-air mixture; (2) heating up to the temperature 90 ^oC; steam injection up to the pressure P=1.5 bar. Sampling probes method will be used to control uniformity of the mixture before experiments. 10 to 20 thermocouples will be installed inside the A2 vessel to record local temperature and to control thermal uniformity of the mixture.

High speed shadow photo (Background Oriented Schlieren technique) combined with pressure sensors (PCB type), silicon photodiodes and ion probes are planned to be used in forthcoming experiments. Acoustic sensors can be used to record acoustic effects under combustion process. High speed cameras will record top view and side view of flame development. Amount of sensors and their position will be specified by JSI and KIT. The data acquisition system with 1 MHz sampling rate will be used to record pressure, light and ion probe signals. The result will be a pressure- or light- or ion current signal-time history. Post processing of BOS images will be required to visualize flame shape and its position.

6 CONCLUSIONS

The LACOMECO project at KIT provides to European research institutions access to several experimental facilities which are designed to study the remaining severe accident safety issues, including the coolability of a degraded core, corium coolability in the RPV, possible melt dispersion to the reactor cavity, molten corium concrete interaction and hydrogen mixing and combustion in the containment. These facilities are unique in providing experimental programmes in specific fields of core damage initiation up to hydrogen behaviour and are designed to be complementary to other European facilities and experimental platforms to form a coherent European nuclear experimental network.

The LACOMECO experimental platform at KIT includes:

- QUENCH facility is the only operating experimental facility in EU for investigations of the early and late phases of core degradation in prototypic geometry for different reactor designs and different cladding alloys, incl. analysis of the relocation of cladding and fuel and the formation and cooling of in-core debris beds to gain information on the characteristics of the created particles.
- LIVE facility concentrates on the investigation of the whole evolution of the in-vessel late phase of a severe accident, including e.g. formation and growth of the in-core melt pool, characteristics of corium arrival in the lower head, and molten

pool behaviour after the debris re-melting in large scale 3D geometry with emphasis on the transient behaviour.

- HYKA experimental facilities are among the largest available in the world. In combination with the high static and dynamic pressures the experimental facilities are designed for, a unique experimental centre especially for combustion experiments in confined spaces is available with HYKA. Due to the different orientations and sizes the set of large and strong experimental vessels offers a flexible basis for scientific experimental work on reactive hydrogen mixtures.
- DISCO is the only operating facility available worldwide for integral DCH investigations. It is designed to perform scaled experiments that simulate melt ejection from the RPV to the reactor cavity after the RPV failure under low system pressure during severe accidents in LWRs. These experiments investigate the fluid-dynamic, thermal and chemical processes during melt ejection out of a breach in the lower head of an LWR pressure vessel at pressures below 2 MPa.

The activities within the LACOMECO project are strongly coupled with other European projects, such as SARNET2, as well as with third countries (Russian Federation, Ukraine, Kazakhstan) through the ISTC and the STCU. They could be extended to activities with other countries cooperating of the EURATOM Research programme.

The experimental results are used for the development of models and their implementation in the severe accident codes such as ASTEC. This helps to capitalise the knowledge obtained in the field of severe accident research in the ASTEC code and the scientific databases, thus preserving and diffusing this knowledge to a large number of current and future end-users throughout Europe.

ACKNOWLEDGEMENTS

The authors gratefully acknowledge funding by Euratom to support the work within LACOMECO and SARNET2 projects.

REFERENCES

[1] SNETP: Sustainable Nuclear Energy Technology Platform, Strategic Research Agenda, May 2009.

[2] T. Albiol et al., SARNET: Severe accident research network of excellence, Progress in Nuclear Energy Volume 52, Issue 1, January 2010, pp. 2-10.

[3] Jean-Pierre Van Dorsselaere et al., Status of the SARNET network on severe accidents, Proceedings of the 2010 International Congress on Advances in Nuclear Power Plants, ICAPP'10: embedded topical meeting, June 13-17, 2010, San Diego, California, LaGrange Park, American Nuclear Society, 2010, pp. 1032-1046.

[4] B. Schwinges et al., Ranking of severe accident research priorities, Progress in Nuclear Energy Volume 52, Issue 1, January 2010, pp. 11-18.

[5] M. Steinbrück, M. Große, L. Sepold, J. Stuckert, Synopsis and outcome of the QUENCH experimental program, Nucl. Eng. Design 240, 2010, pp. 1714-1727.

[6] L. Sepold et al., Results of the QUENCH-09 experiment compared to QUENCH-07 with incorporation of B4C absorber, Nuclear Technology, 154. 2006, pp. 107-16.

[7] L. Sepold et al., Results of the AgInCd Absorber Rod Experiments QUENCH-13. Forschungszentrum Karlsruhe Report FZKA-7403, 2009.

[8] M. Steinbrück et al., Experiments on air ingress during severe accidents in LWRs, Nucl. Eng.Design, 236, 2006, pp. 1709-19.

[9] J. Stuckert et al., Experimental and post-test calculation results of the integral reflood test QUENCH-12 with a VVER-type bundle, Annals of Nuclear Energy, 36, 2009, pp. 183-92.

[10] J. Stuckert et al., Experimental results of the QUENCH-16 bundle tests on air ingress, performed within the framework of the LACOMECO project, 17th Internat. QUENCH-Workshop, Karlsruhe, November 22-24, 2011.

[11] M. Steinbrück, Prototypical experiments relating to air oxidation of Zircaloy-4 at high temperatures, Journal of Nuclear Materials 392, 2009, pp. 531-544.

[12] J. Birchley et al., WP5.1: Conduct and analytical support to air ingress experiment QUENCH-16, Paper 50, 5th European Review Meeting on Severe Accident Research (ERMSAR-2012), Cologne (Germany), March 21-23, 2012.

[13] J.-P V. Dorsselaere, F. Fichot, J.-M Seiler, Views on R&D needs about in-vessel reflooding issues, with a focus on debris coolability, Nuclear Engineering and Design, 1976–1990, 2006, pp. 236.

[14] D. Magallon et al., European expert network for the reduction of uncertainties in severe accident safety issues (EURSAFE), Nuclear Engineering and Design 235, 2005, pp. 309–346.

[15] A. Miassoedov, T, Cron, X. Gaus-Liu, A. Palagin, S. Schmidt-Stiefel, T. Wenz, LIVE experiments on melt behavior in the reactor pressure vessel lower head. 8th Internat. Conf. on Heat Transfer, Fluid Mechanics and Thermodynamics (HEFAT 2011), Pointe aux Piments, MS, July 11-13, 2011.

[16] A. Palagin, F. Kretzschmar, V. Chudanov, Application of the CFD CONV code to the simulation of LIVE L-4 test. Internat. Congress on Advances in Nuclear Power Plants (ICAPP 2011), Nice, F, May 2-5, 2011, Proc. Paper 11096.

[17] X. Gaus-Liu, A. Miassoedov, J. Foit, T. Cron, F. Kretzschmar, T. Wenz, S. Schmidt-Stiefel, LIVE L4 and LIVE L5L experiments on pool and crust behaviour in the RPV lower head, Nr. 26, The 14th International Topical Meeting on Nuclear Reactor Thermal Hydraulics (NURETH-14), Toronto, Canada, September 25-29, Nr.26, 2011.

[18] Rapport IRSN-2007/83, Rapport CEA-2007/351, Research and development with regard to severe accidents in pressurised water reactors: Summary and outlook pp. 140 (2007).

[19] A. Miassoedov et al., LIVE-CERAM experiment: objectives and status of preparation. Proc. of 17th Internat. QUENCH-Workshop, Karlsruhe, November 22-24, 2011.

[20] L. Meyer, G. Albrecht, Experimental Study of Hydrogen Combustion during DCH Events in Two Different Scales, Proc. of the 14th International Topical Meeting on Nuclear Reactor Thermalhydraulics, NURETH-14, Toronto, Ontario, Canada, September 25-30, 2011.

[21] L. Meyer et al., Melt Dispersion and Direct Containment Heating (DCH) experiments in the DISCO-H test facility, FZKA 6988, Forschungszentrum Karlsruhe. 2004.

[22] L. Meyer, G. Albrecht, C. Caroli, I. Ivanov, Direct containment heating integral effects tests in geometries of European nuclear power plants, Nuclear Engineering and Design, Vol. 239, 2009, pp. 2070-2084.

[23] M. Kuznetsov, J. Grune, A. Friedrich, K. Sempert, W. Breitung and T. Jordan, Hydrogen-Air Deflagrations and Detonations in a Semi-Confined Flat Layer, In: Fire and Explosion Hazards, Proceedings of the Sixth International Seminar (Edited by D. Bradley, G. Makhviladze and V. Molkov), 2011, pp 125-136, ISBN: 978-981-08-7724-8, doi:10.3850/978-981-08-7724-8_02-05.

[24] J. Grune, K. Sempert, H. Haberstroh, M. Kuznetsov, T. Jordan, Experimental Investigation of Hydrogen-Air Deflagrations and Detonations in Semi-Confined Flat Layers, Journal of Loss Prevention in the Process Industries, Available online 8 October 2011, ISSN 0950-4230, 10.1016/j.jlp.2011.09.008. (http://www.sciencedirect.com/science/article/pii/S0950423011001677)

[25] M.S. Kuznetsov, V.I. Alekseev, S.B. Dorofeev, I.D. Matsukov. Propagation and Quenching of Turbulent Flames in Nonuniform Mixtures. Proceedings of 16th International Colloquium on Dynamic of Explosions and Reactive Systems, Poland, Cracow, 1977, p. 617.

[26] A. Kotchourko, A. Bentaib, K. Fischer, N. Chaumeix, J. Yanez, S. Benz, S. Kudriakov. International standard problem on hydrogen deflagration (ISP-49). Final report, 2011.

[27] Sanjeev Gupta. Reactor Safety Research Program at THAI Test Facility. Proc. of the 17th Pacific Basin Nuclear Conference. Cancún, Q.R., México, October 24-30, 2010.